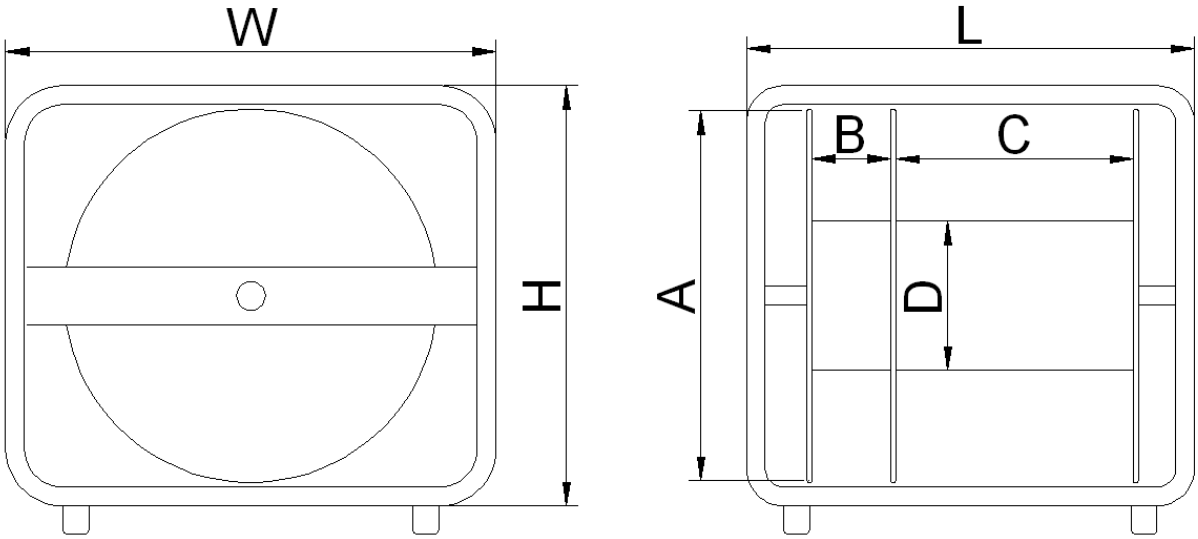

All dimensions in mm								
Model	W	H	L	A	B	C	D	Weight
CB-26	450	450	480	400	90	260	160	16.5KG
CB-20	450	450	400	400	70	200	160	13.5KG